www.reelschematic.com

Daiwa
ENGINEERED TACKLE

SPINNING REEL 7600 7600H

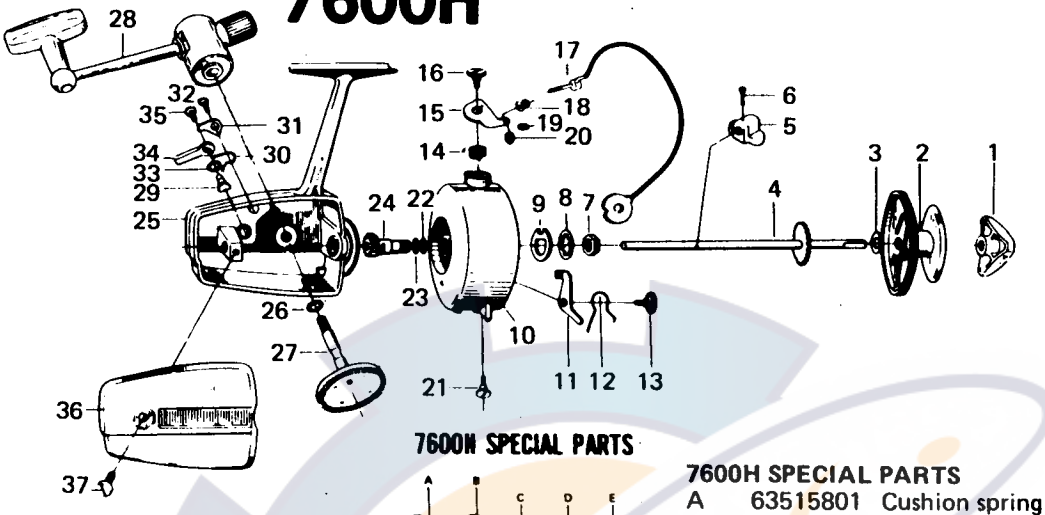

7600H SPECIAL PARTS

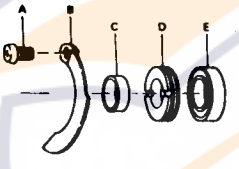

7600H SPECIAL PARTS

A	63515801	Cushion spring retaining screw
B	61505221	Cushion spring
C	65002131	Pinion collar
D	63407721	Ball bearing retaining nut
E	66310041	Ball bearing

LINE CAPACITY: 250 YDS., 15 LB. TEST (210m Dia. 0.40mm)

Key No.	Parts No.	Parts Name
1	60051802	Drag knob
2	60004351	Spool assembly
3	63712731	Spool washer
4	60043331	Main shaft
5	64803231	Oscillating slider
6	64902421	Oscillating slider pin
7	63405842	Rotor nut
8	61601611	Rotor washer
9	63713111	Rotor retaining washer
10	60054451	Rotor
11	65702741	Bail kick lever
12	61405031	Bail kick lever spring
13	63611511	Bail kick lever screw
14	61412801	Bail spring
15	62301651	Arm lever
16	63616411	Arm lever screw
17	60029221	Bail
18	62501011	Line roller
19	61600121	Bail washer
20	63402011	Bail nut
21	63616501	Bail holder screw
22	63713801	Pinion adjusting washer
23	63712823	Pinion washer
24	64005521	Pinion
25	60053323	Body
26	63700352	Drive gear washer
27	64114411	Drive gear
28	60002031	Handle
29	64601851	Anti-reverse cam
30	61409031	Anti-reverse claw spring
31	61101711	Anti-reverse claw
32	63512561	Anti-reverse claw screw
33	61501751	Anti-reverse lever washer
34	65401911	Anti-reverse lever
35	63501931	Anti-reverse lever screw
36	67056203	Body cover
37	63606911	Body cover screw

(19, 22, 23, 7600 only)

For 7600H only

15	62303911	Arm lever
17	60029431	Bail
18	62501901	Line roller
20	63408201	Bail nut
24	64006971	Pinion
25	61908932	Body
27	64114531	Drive gear
28	60002032	Handle
32	61103301	Anti-reverse claw
37	67056204	Body cover